U.S.S. ENTERPRISE
BUILDING INSTRUCTIONS

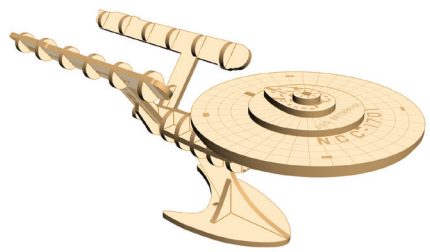

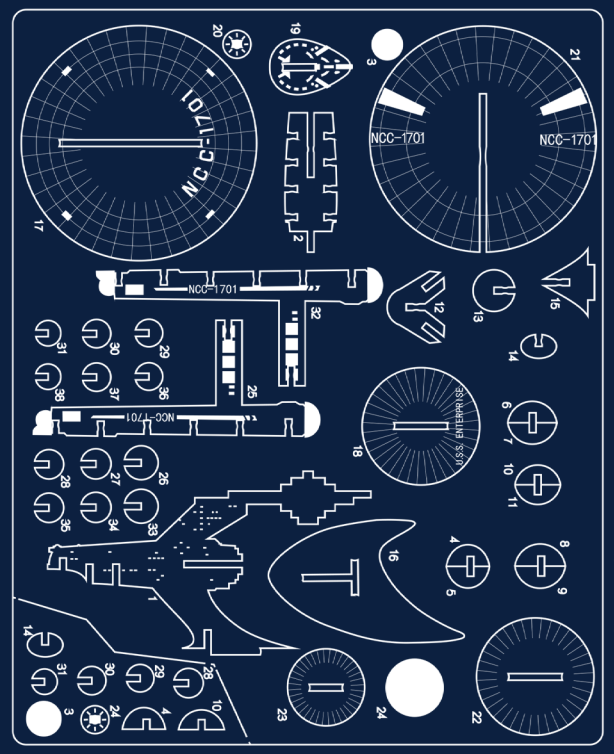

Manufactured in Shaoguan, China Lot #12032018

READ BEFORE ASSEMBLING:

- Go through the instructions one step at a time.
- Don't punch out all of the precut parts at once.
- Plywood thickness and color may vary.
- While not necessary, glue may be applied if desired.
- If you have trouble punching out the small pieces from the board, use tweezers or a toothpick to help.
- Adult supervision recommended.

WARNING: CHOKING HAZARD - CONTAINS SMALL PARTS. NOT FOR CHILDREN UNDER 3 YRS.

1

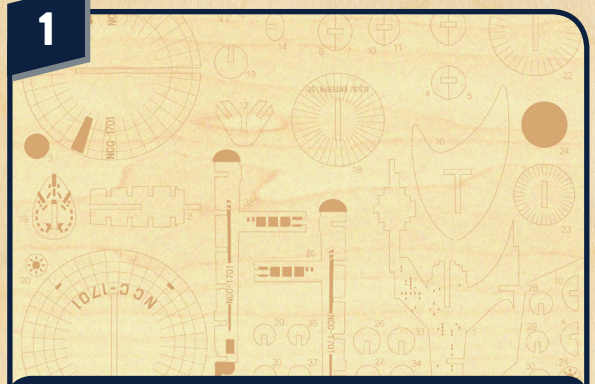

Find pieces 1 and 2 on the board.

2

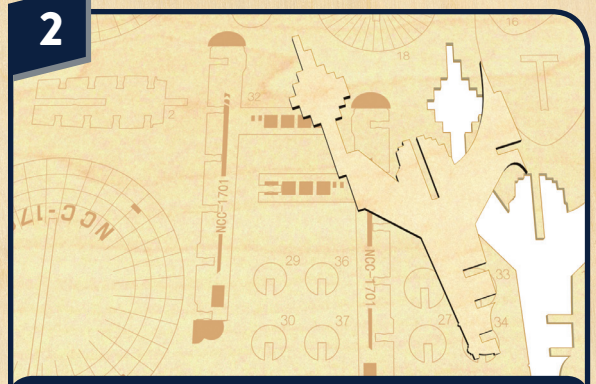

Pop out only these puzzle pieces from the board.

3

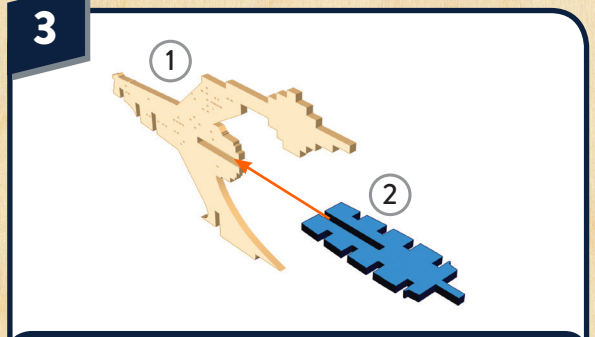

To put the two pieces together, match up the slots on each piece. Slide together.

4

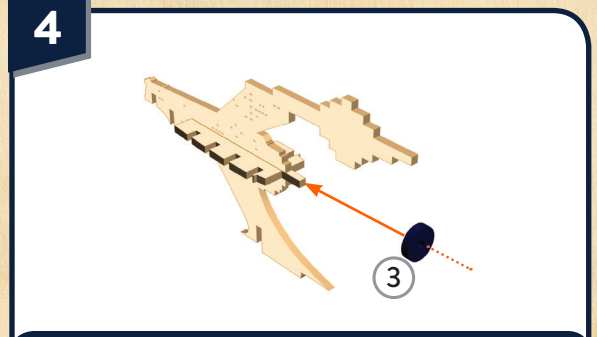

Continue assembling by putting pieces together in numerical order.

5

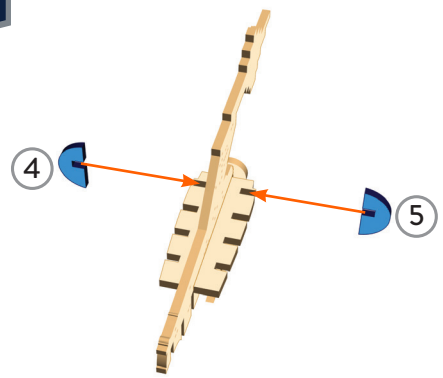

6

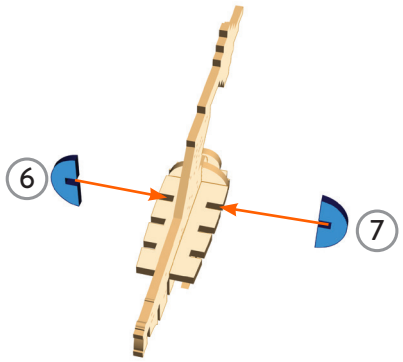

7

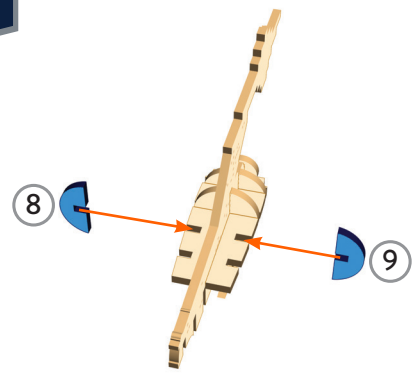

8

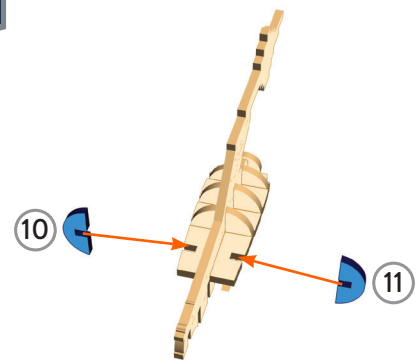

9

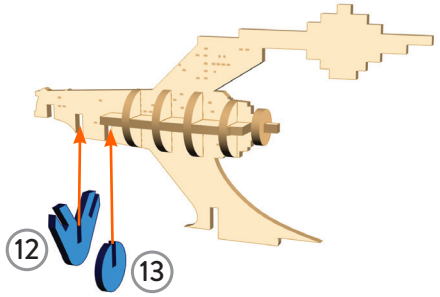

10

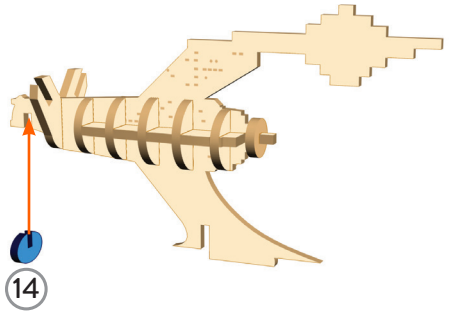

11

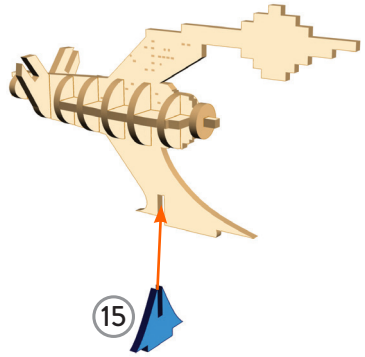

12

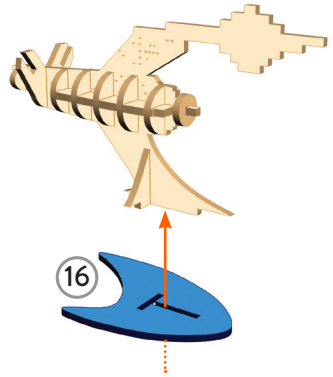

13

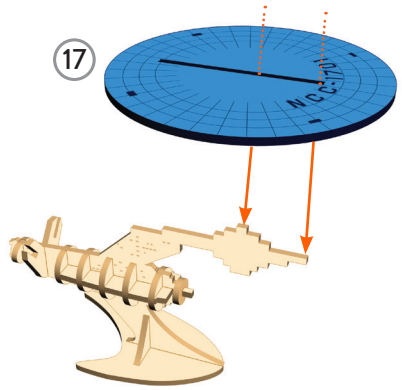

14

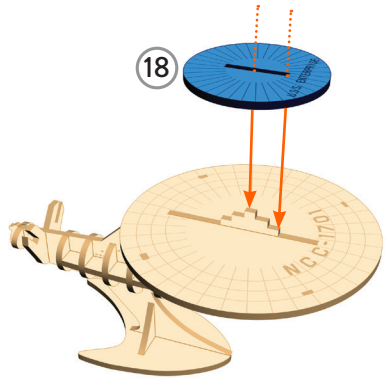

15

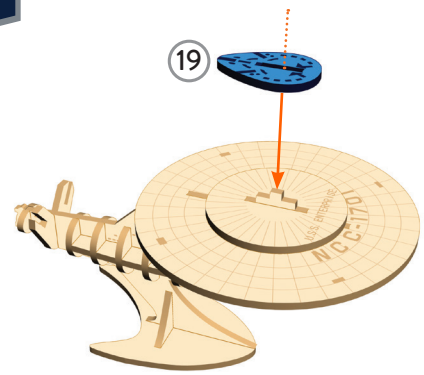

16

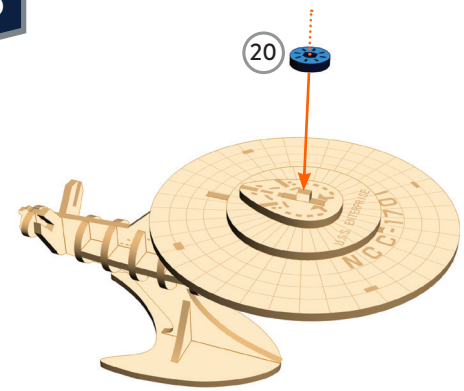

17

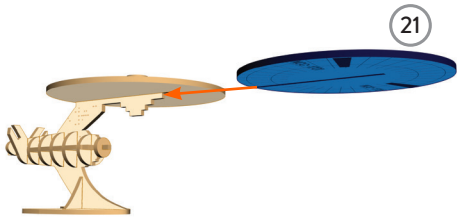

Slide piece 21 into place so that it is flush with the bottom of piece 17.

18

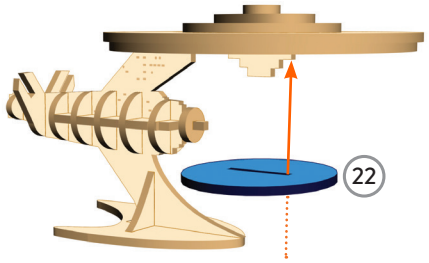

19

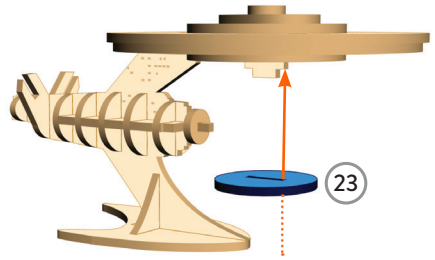

20

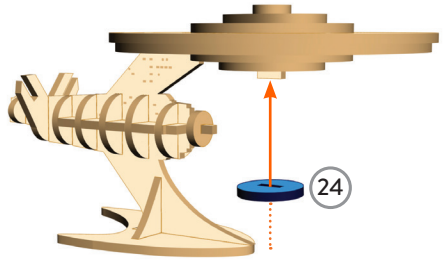

21

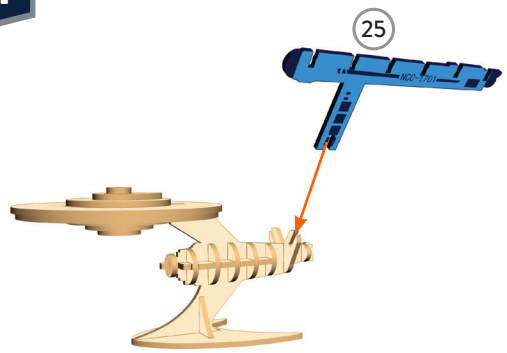

22

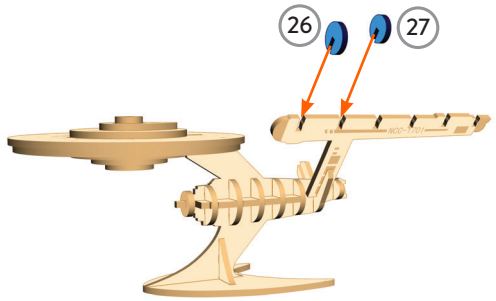

23

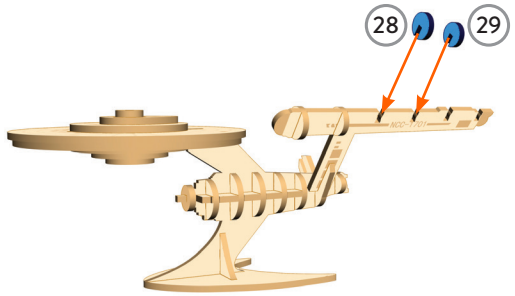

24

25

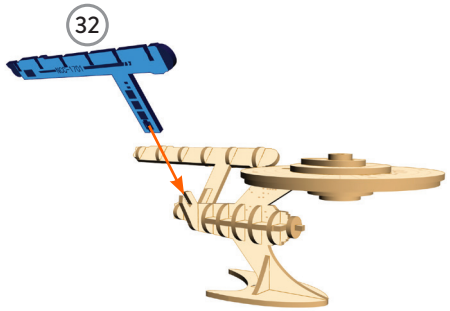

26

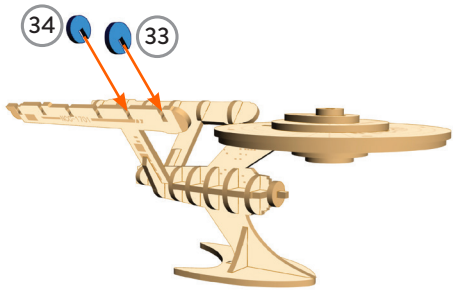

27

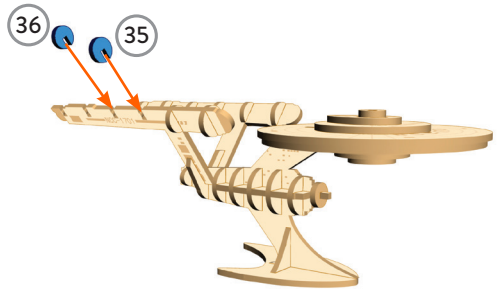

28